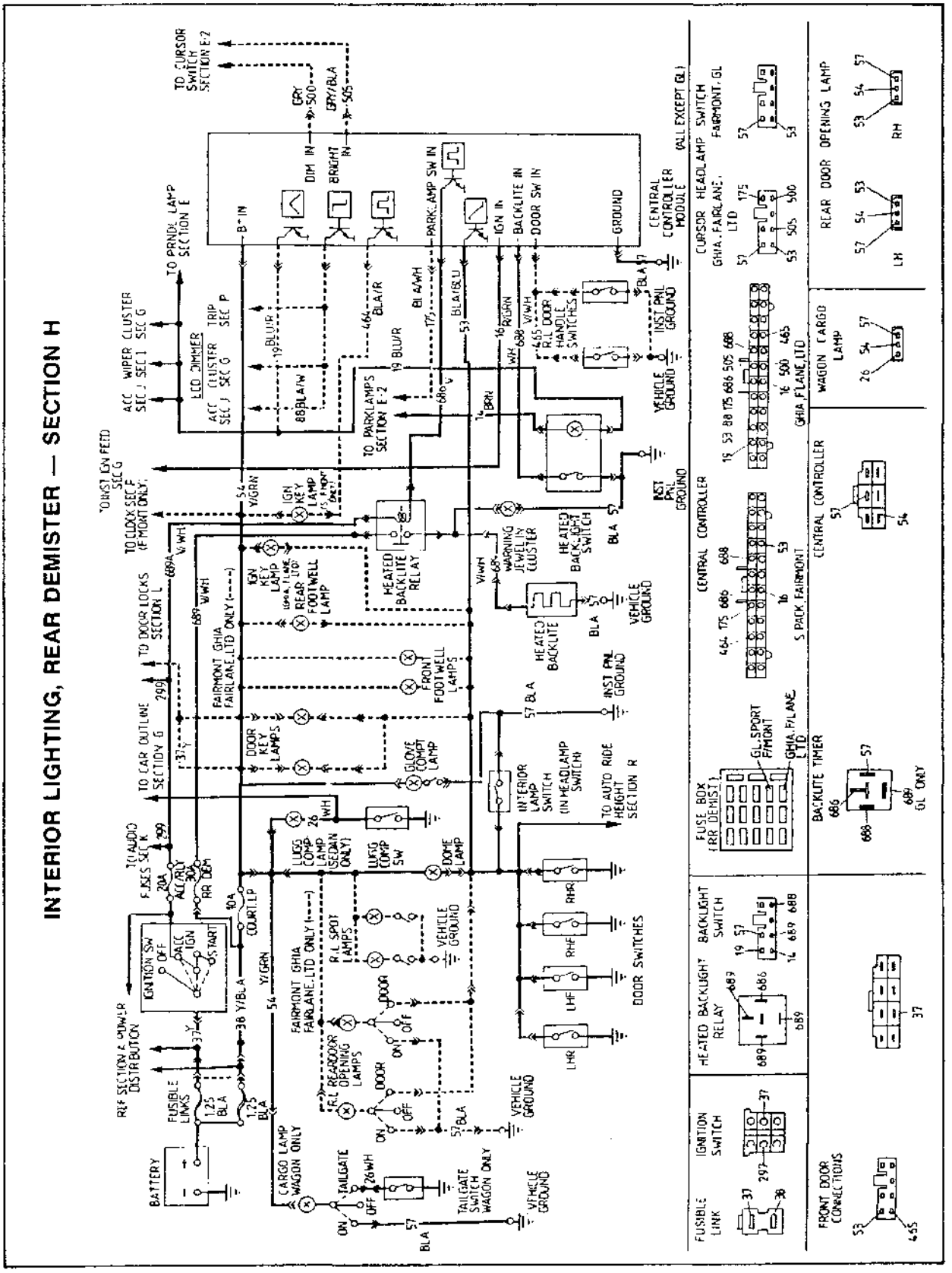INTERIOR LIGHTING, REAR DEMISTER — SECTION H